2020.01

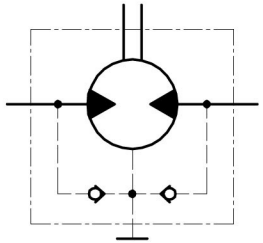

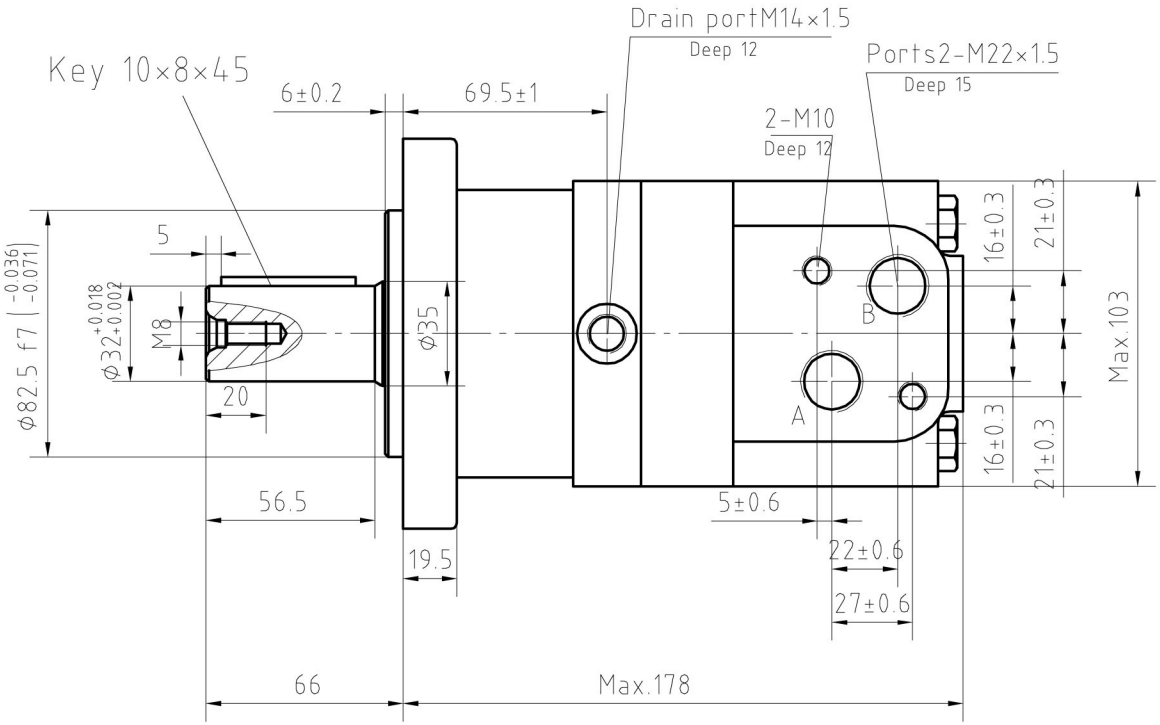

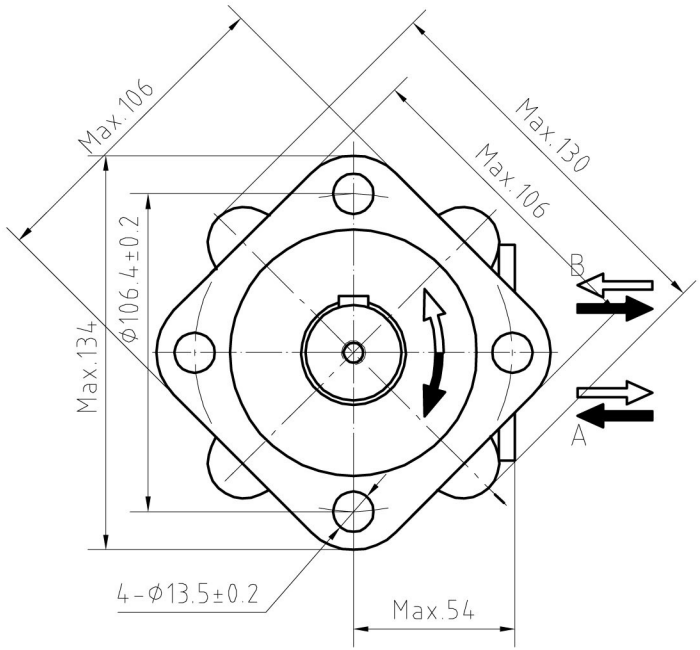

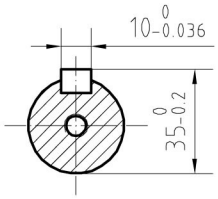

Displacement(ml/r)	126.3
Max.cont.Pressure drop(bar)	175
Max.cont.torque(N.m)	303
Max.flow(L/min)	75
Max.speed(r/min)	590
Max.OutPut.Power(Kw)	16

M+S MS125CM

ZIHYD BM3Y-125P10AY2/T11

NINGBO ZHONGYI HYDRAULIC MOTOR CO.,LTD.

BM3Y-125P10AY2/T11